Training on teaching of car development process with an illustration of ergonomics and simulations

Jozef Bucha

STU SjF
SLOVENSKÁ TECHNICKÁ UNIVERZITA V BRATISLAVE
STROJNÍCKA FAKULTA

What is Adams?

- Automatic Dynamic Analysis of Mechanical Systems
- Development started in 1974 at the University of Michigan
- Mechanical Dynamics, Inc. started with Adams/Solver
- MDI was acquired by MSC in 2002

Adams Modules in version 2014

- Adams/Solver
- Adams/View
- Adams/PostProcessor
- Adams/Flex
- Adams/ViewFlex
- Adams/Durability
- Adams/Vibration
- Adams/Controls
- Adams/Exchange
- Adams/Tire FTire
- Adams/Insight
- Adams/Car
- Adams/Machinery

Adams/Car

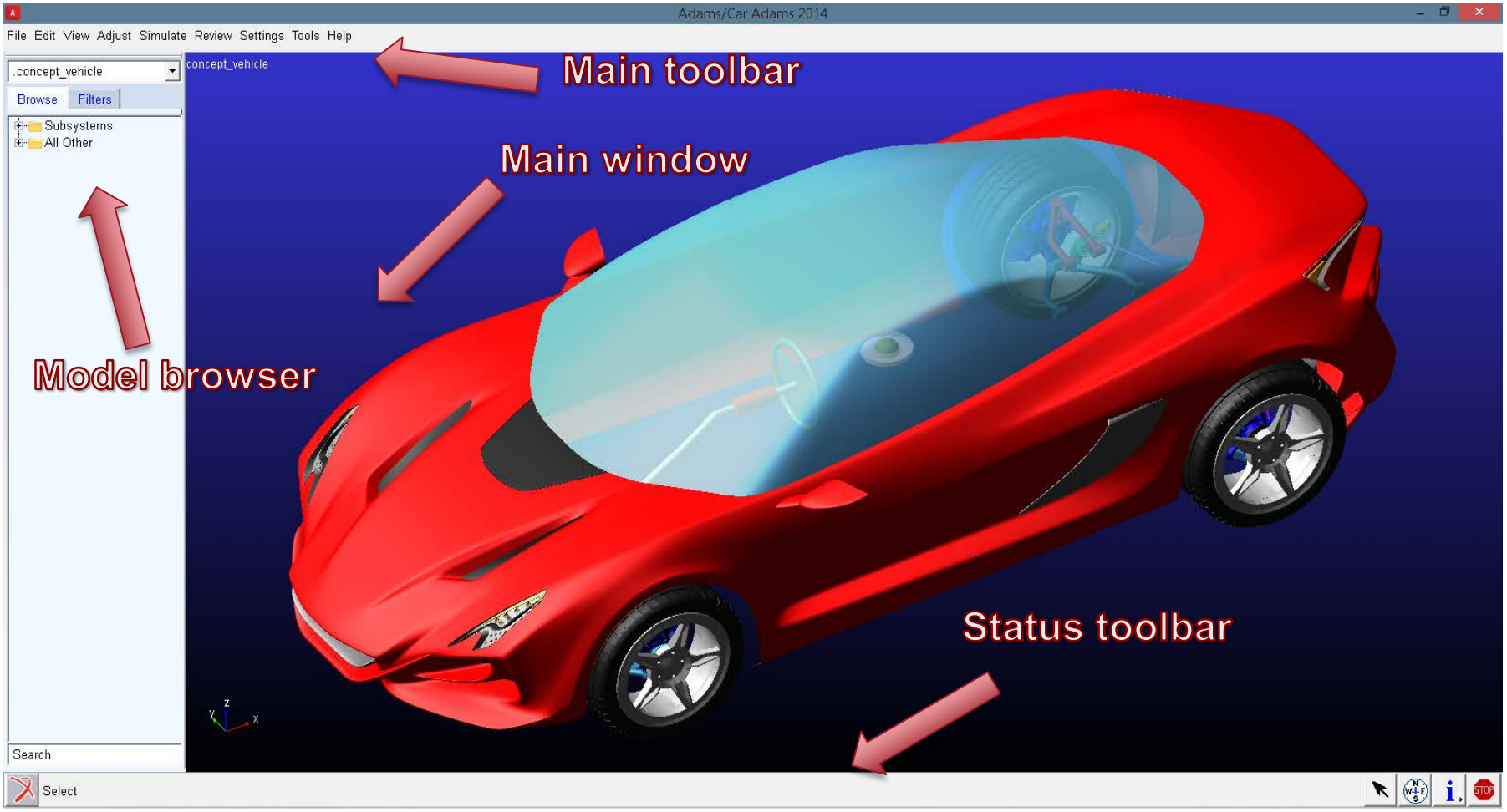
Adams/Car Adams 2014
File Edit View Adjust Simulate Review Settings Tools Help
.concept_vehicle
Browse
Filters
Subsystems
All Other
Search
concept_vehicle
Main toolbar
Main window
Model browser
Status toolbar
Select

Adams/Car - advantages

- Database structure
- Prepared templates
- Quick and easy vehicle components changes
- Predefined vehicle maneuvers
- Incorporated flexibility of bodies
- Taylored for vehicle simulations

Adams/Car – database structure

- All projects are organized in databases
- One database prepared by MSC, with sample models

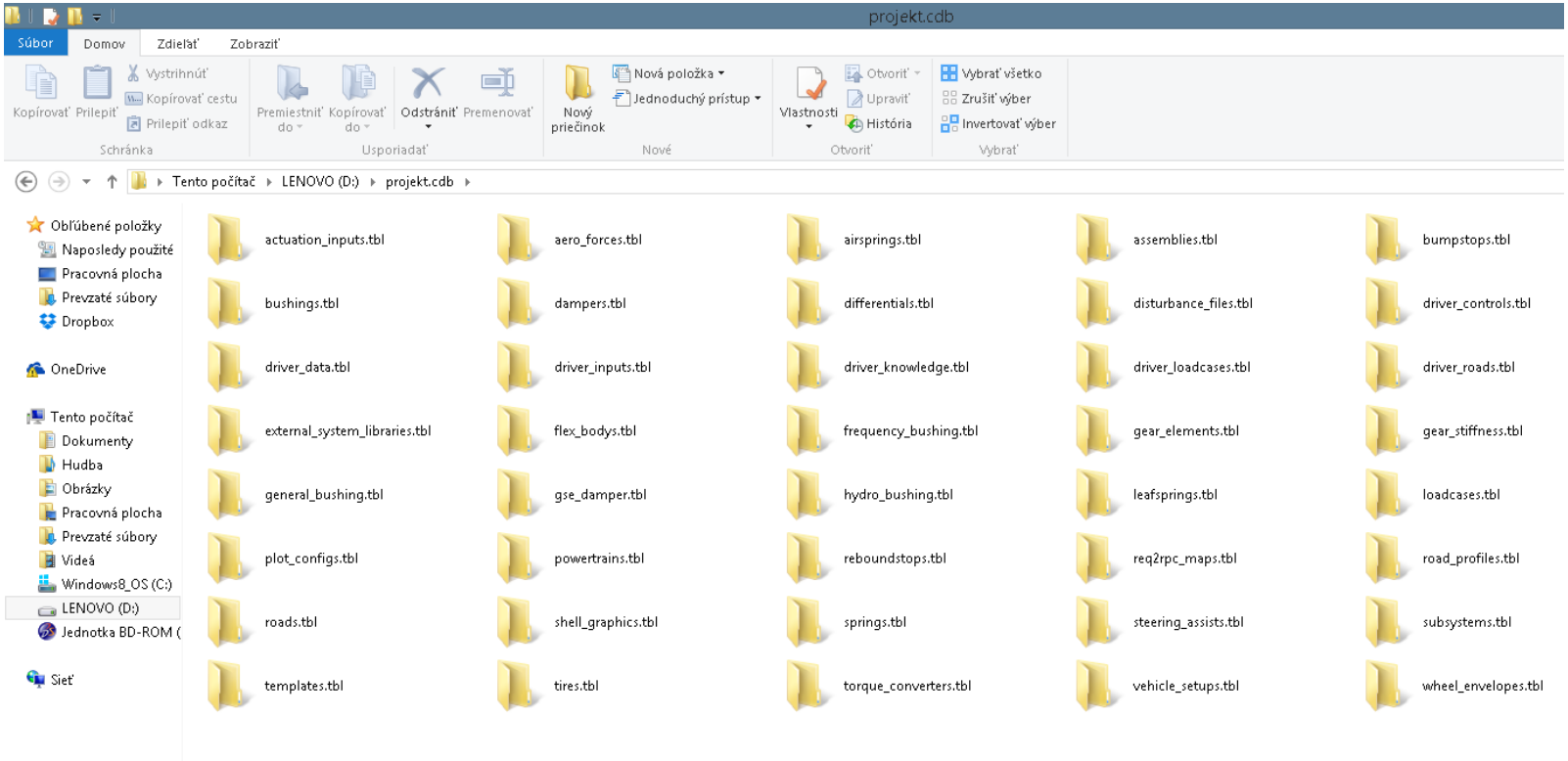

Adams/Car – templates

- Adams/Car contains around 25 prepared templates
- All necessary components of vehicle are prepared

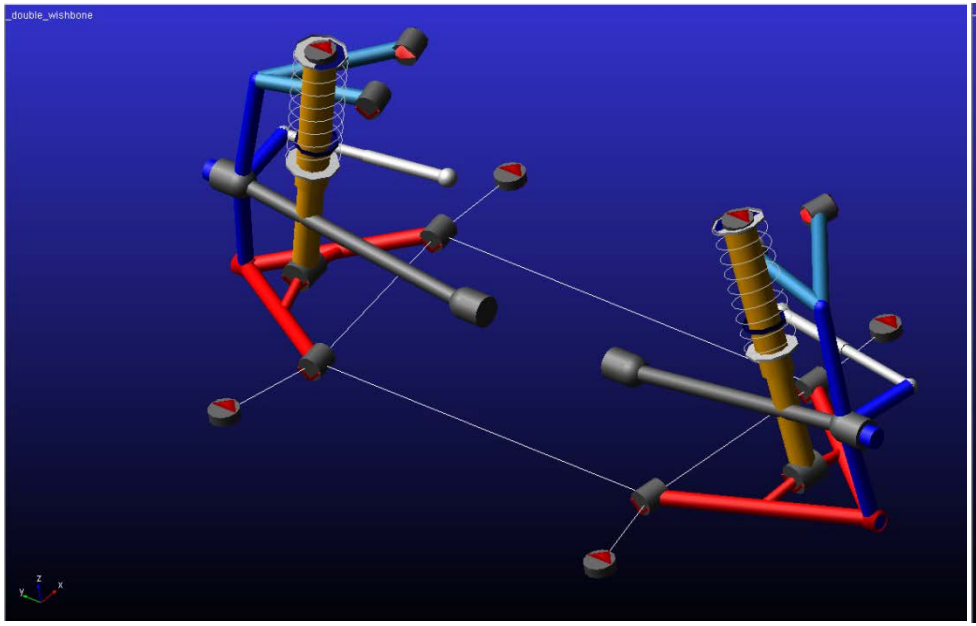

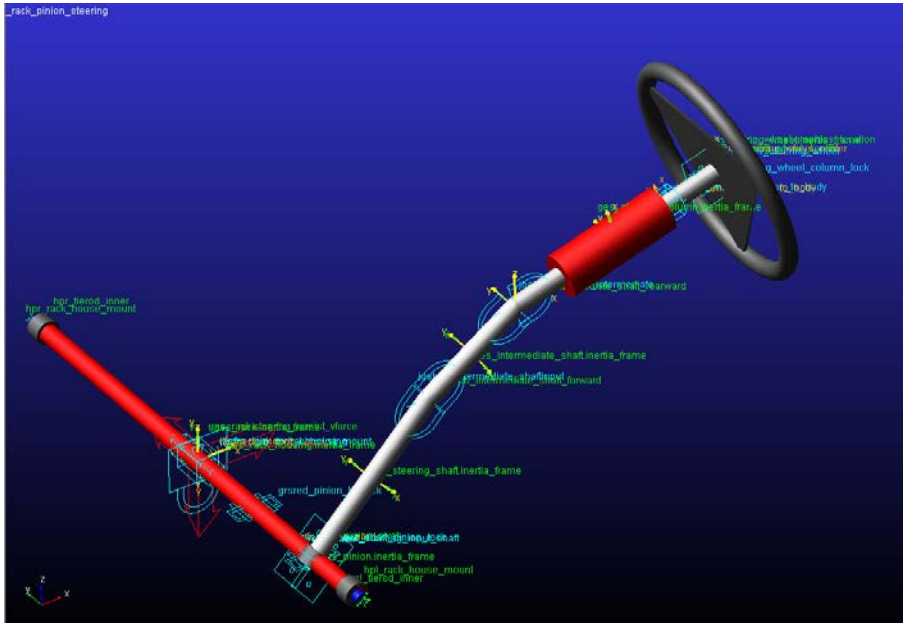

Help file

Adams/Car – data workflow

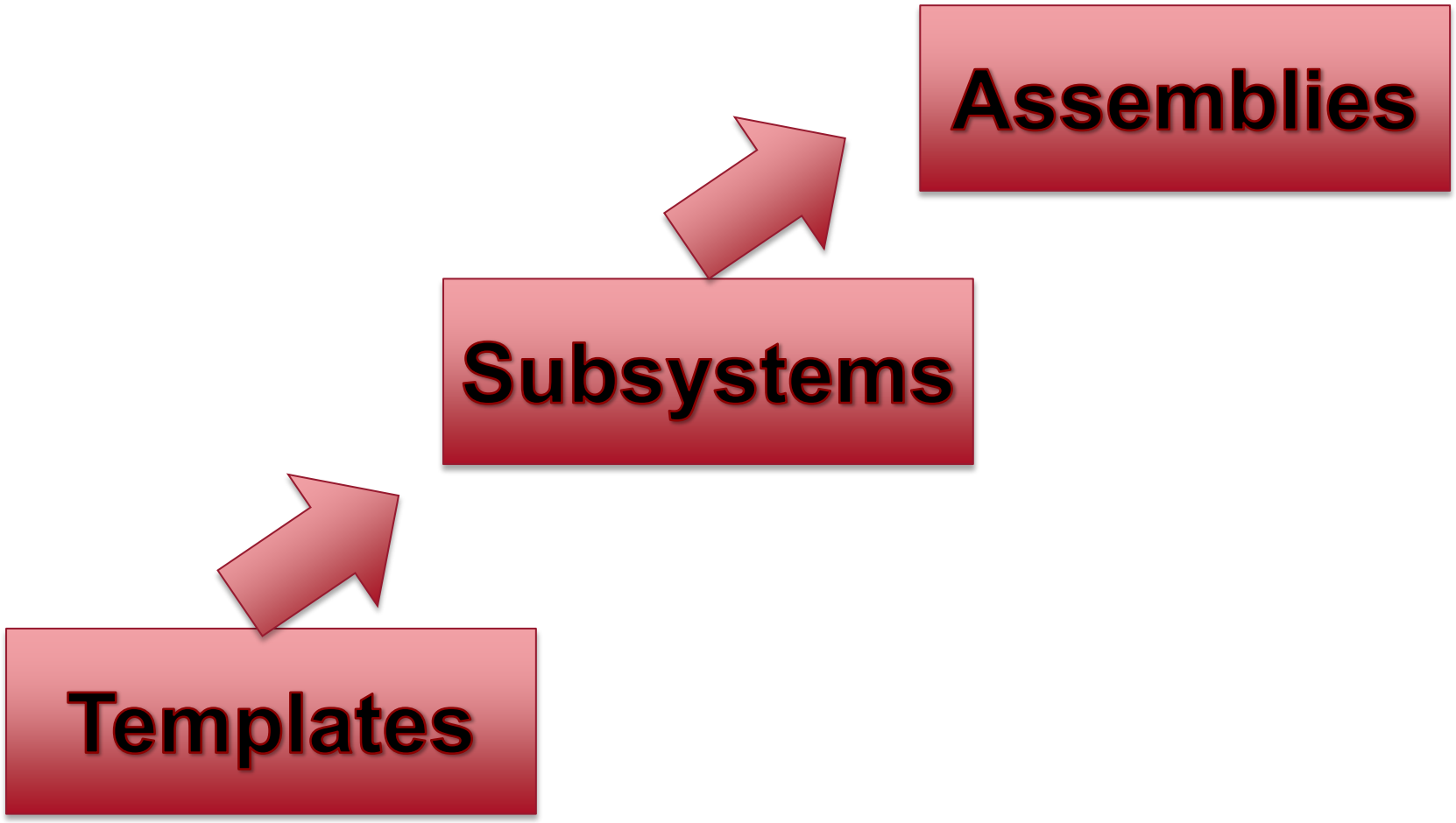

Adams/Car – data workflow

- **Templates -** Defines vehicle sub-assemblies topology (that is, how the parts and joints fit together in the model, how information is transmitted, and so on). For example, a template could be a suspension type, which can be defined either as front and/or rear.
- **Subsystems -** A mechanical model that references a template and tailors it by supplying parameters that adjust the template (for example, locations that define part dimensions and spring stiffness). These models are usually a major system of your vehicle, for example, front suspension, steering system, and body.
- **Assemblies -** A list of subsystems and a single test rig combined in a vehicle or suspension assembly. A test rig is necessary to provide an actuation, in your model, for analysis.

Adams/Car – subsystem

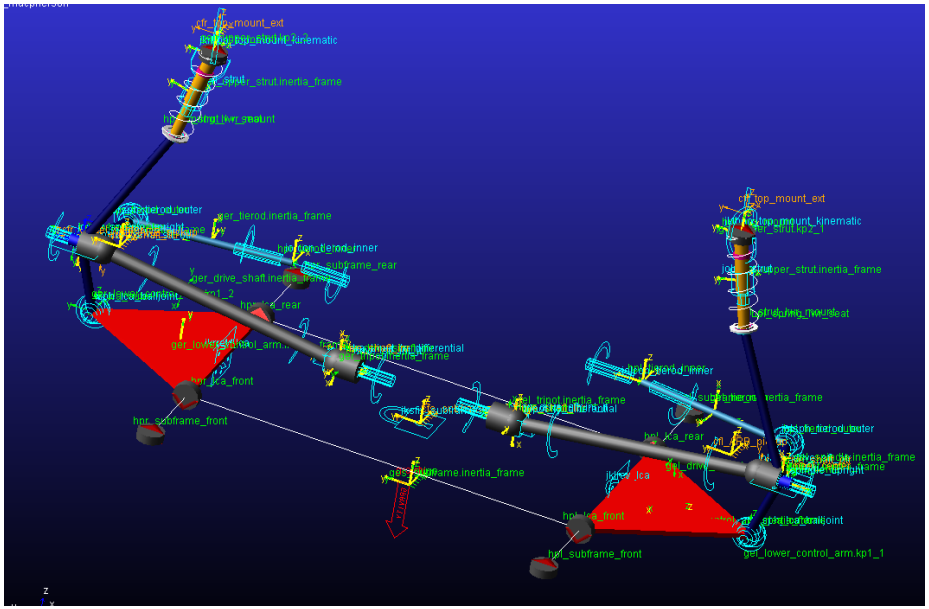

Points
Part properties
Spring, damper, bushing properties

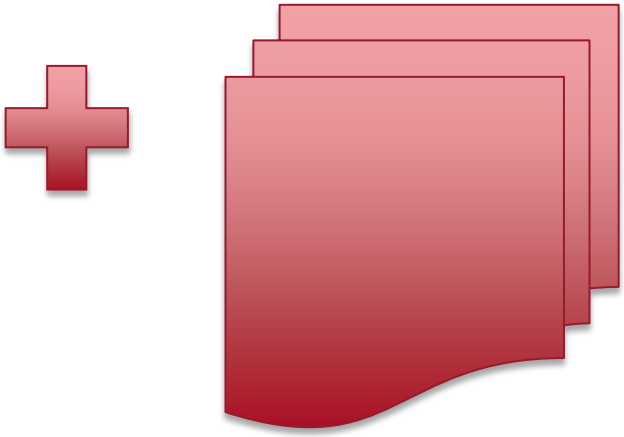

Subsystem

Adams/Car – assemblies

- Suspension assembly
- Full vehicle assembly
- General actuations assembly
- Fourpost assembly (Adams/Car Ride plugin)
- Component assembly (i.e. Tyre analysis)

Adams/Car – assemblies

- Suspension assembly

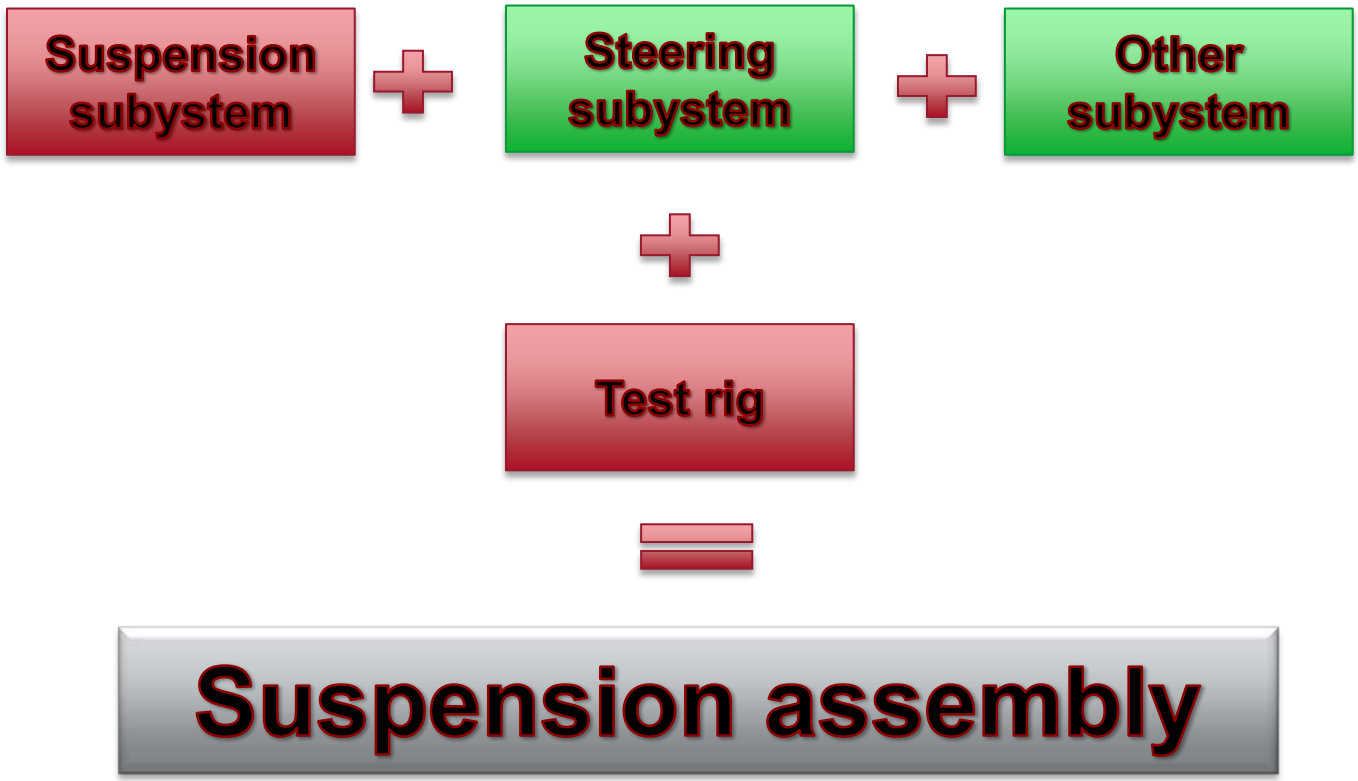

Adams/Car – assemblies

- Suspension assembly

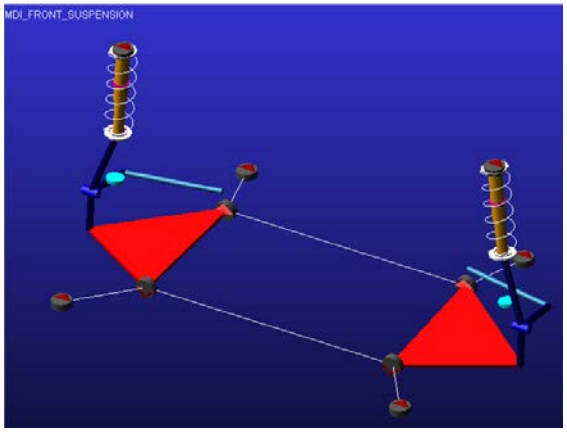

+

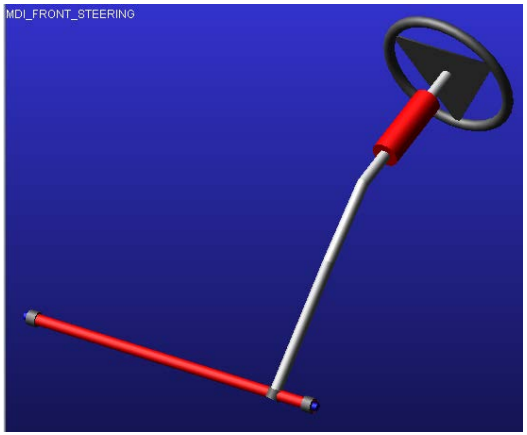

+

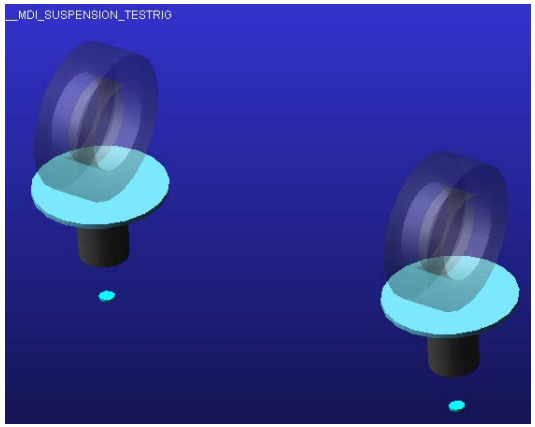

=

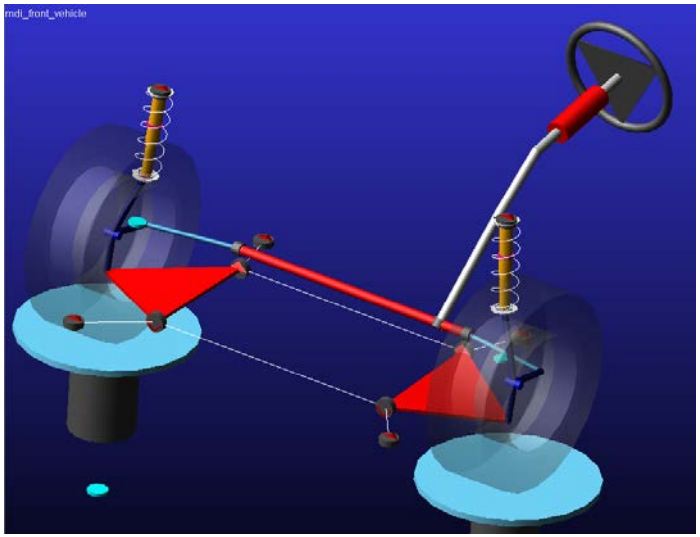

Adams/Car – assemblies

- Full vehicle assembly

Front suspension subystem + Rear suspension subystem + Front wheels subystem + Rear wheels subystem

Steering subystem + Body subystem + Powertrain subystem + Brake subystem

Other subystem + Test rig

= **Full vehicle assembly**

Adams/Car – assemblies

- Full vehicle assembly

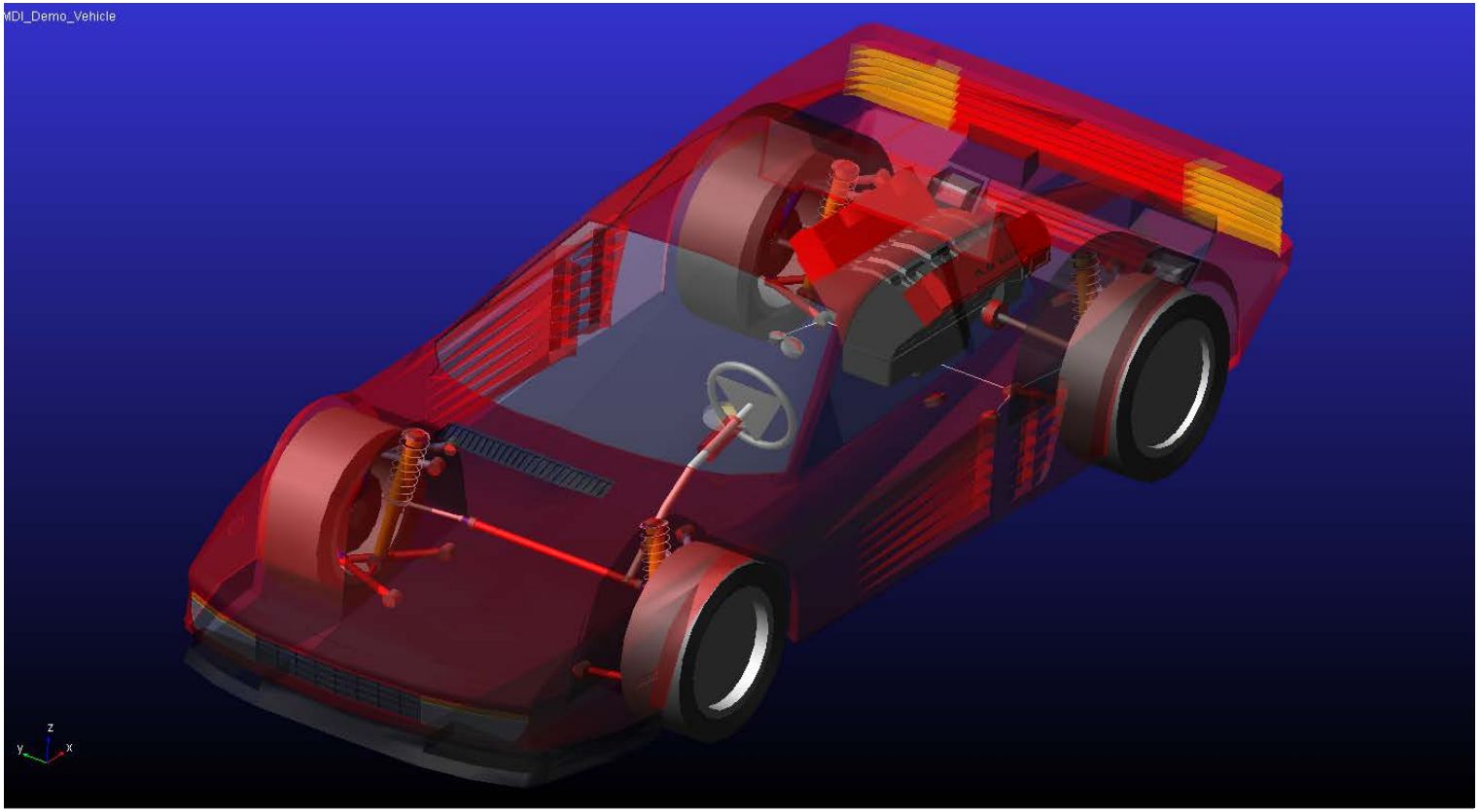

Adams/Car – assemblies

- Fourpost assembly (Adams/Car Ride plugin)

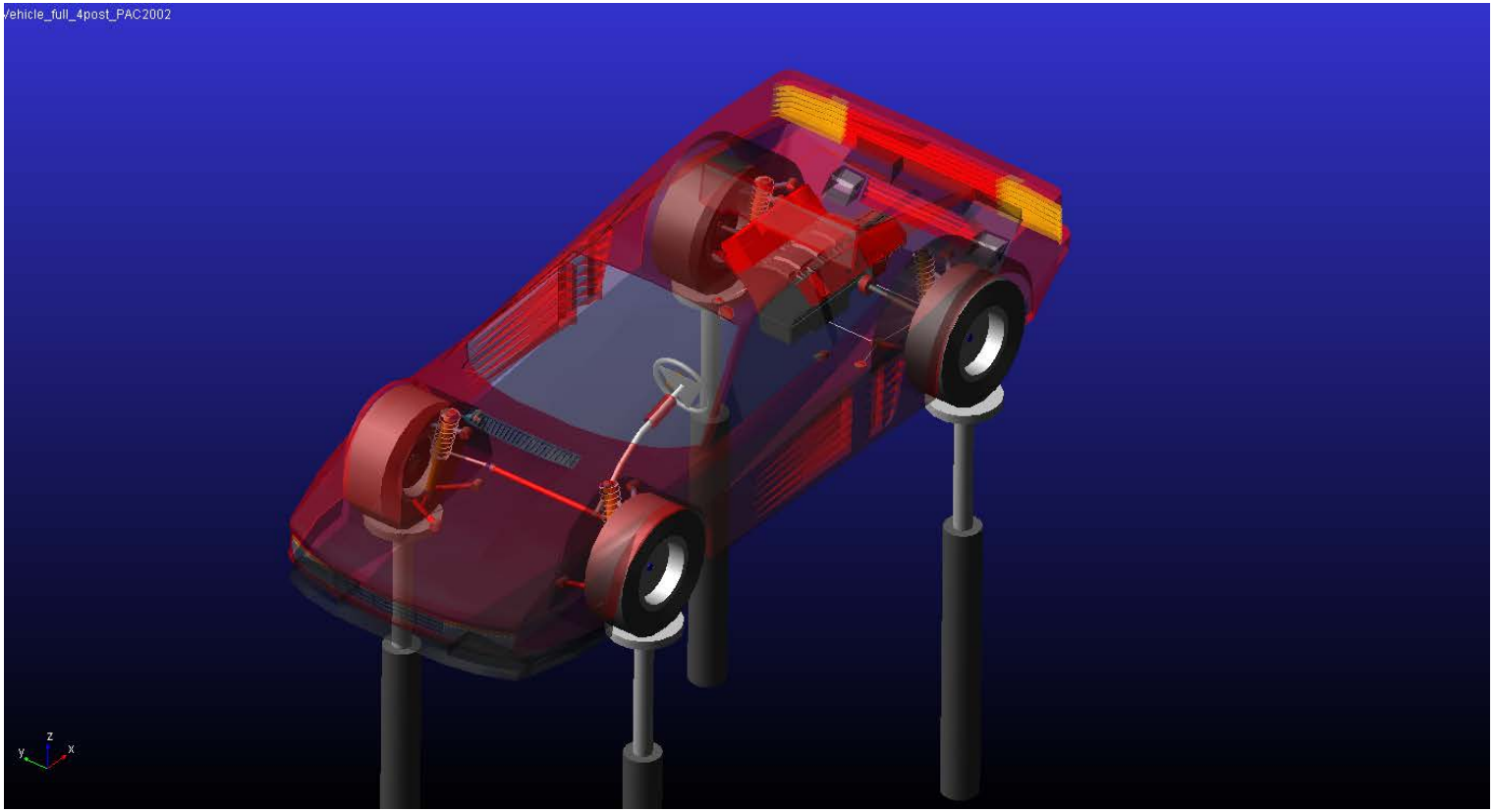

Adams/Car – simulation

- Interconnection between Adams modules

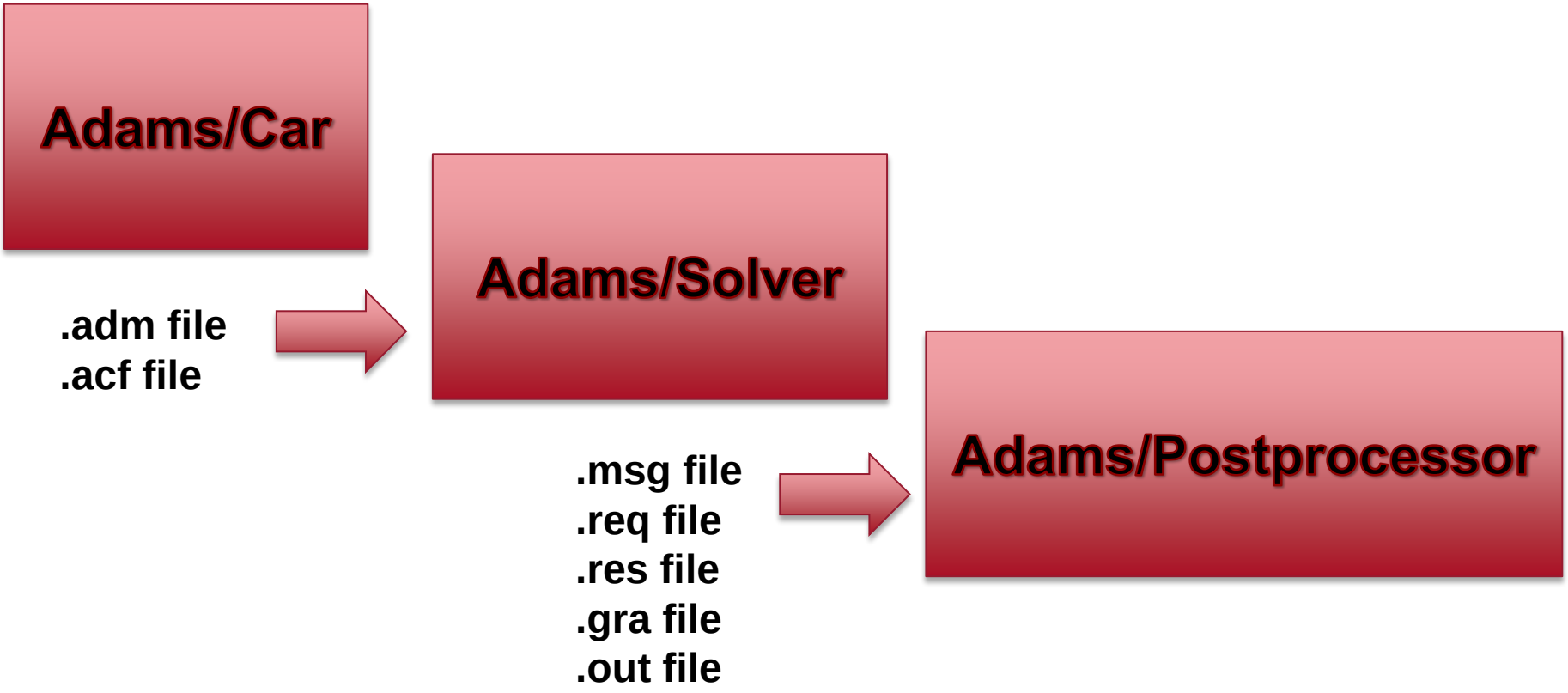

Adams/Car – suspension simulation

- Data workflow during suspension simulation

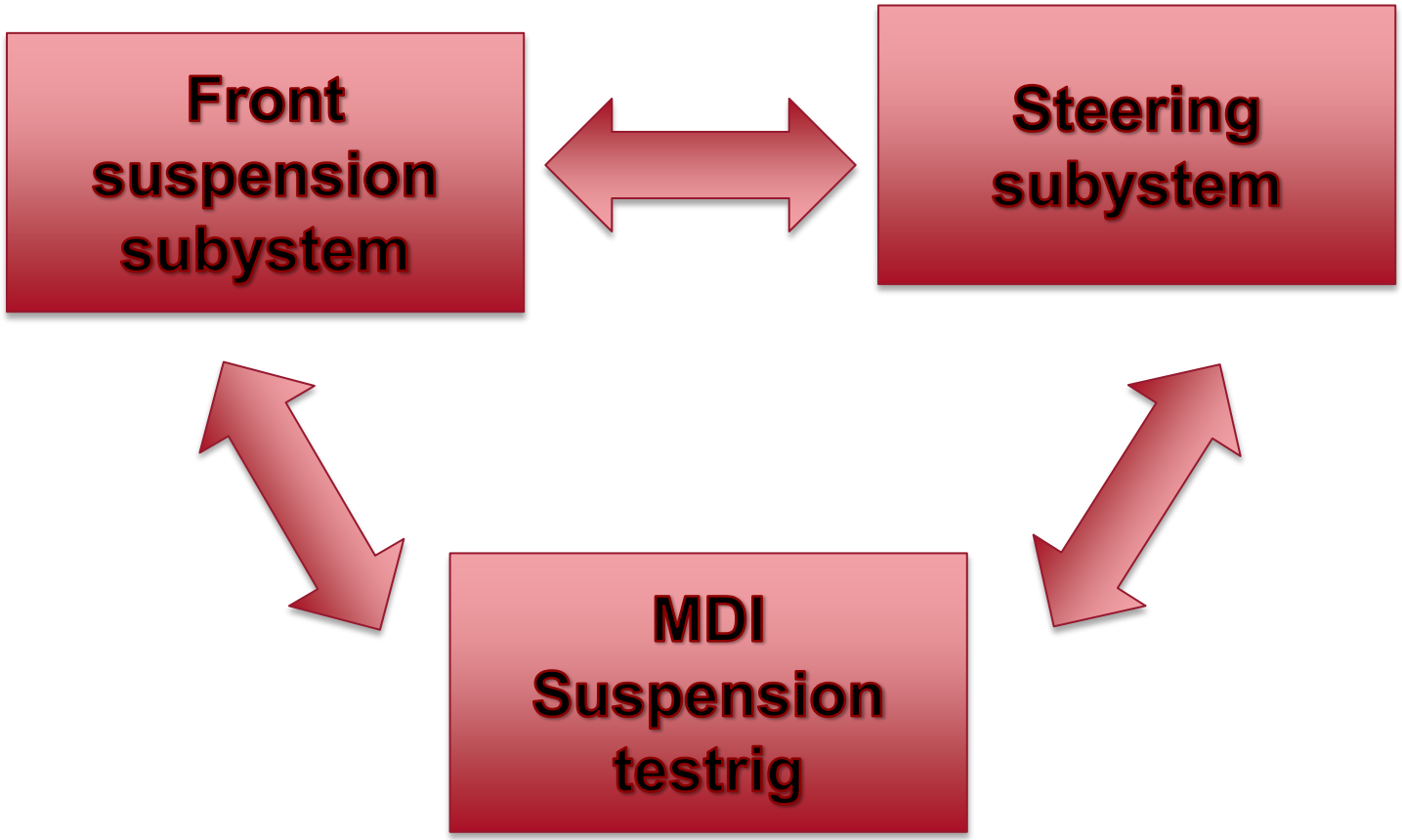

Adams/Car – suspension simulation

Types of simulation

- Quasi static simulations
- Dynamic simulations

Quasi static simulation

- Wheel travel analysis
- Steering analysis
- Roll and vertical force analysis
- Static load

Adams/Car – suspension simulation

Quasi static simulation

- Opposite wheel travel

Bound 100 mm
Rebound -100 mm

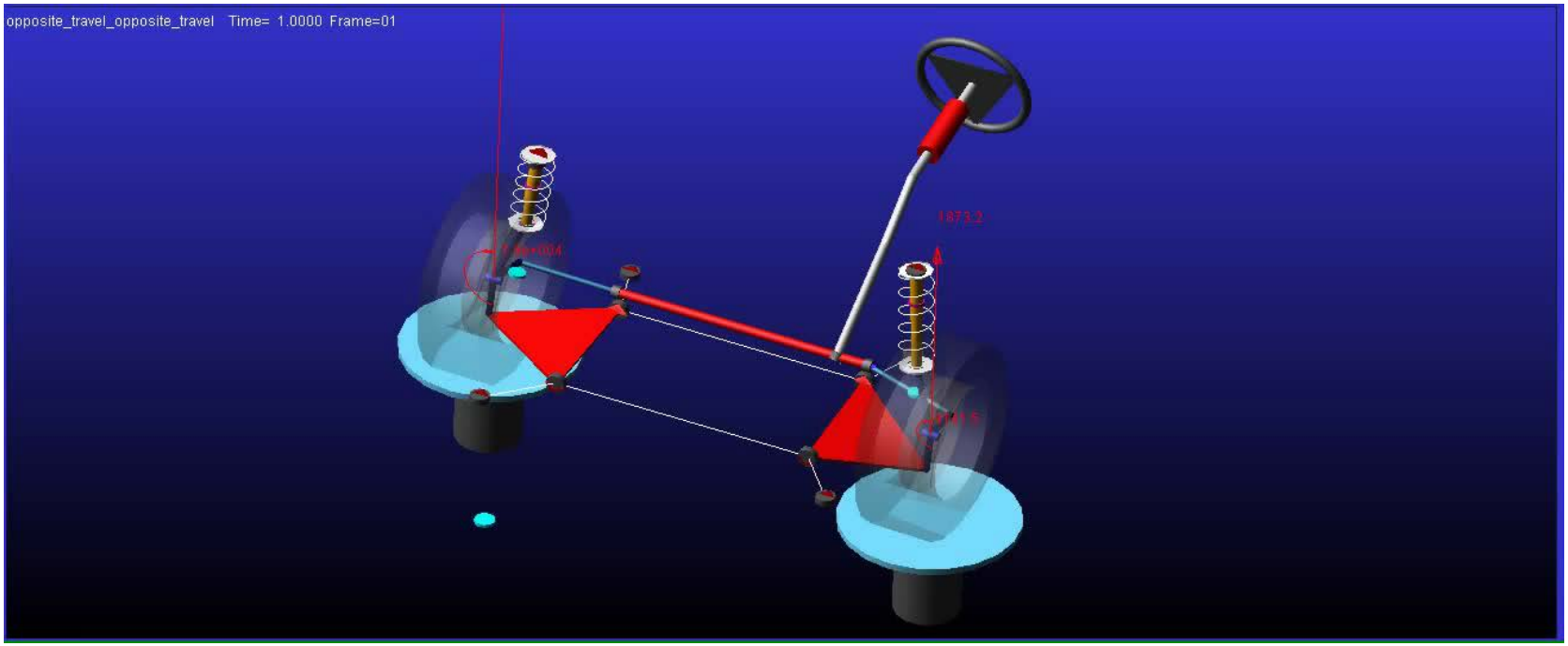

Adams/Car – suspension simulation

Quasi static simulation

- Steering

Upper steering limit -360 deg
Lower steering limit -360 deg

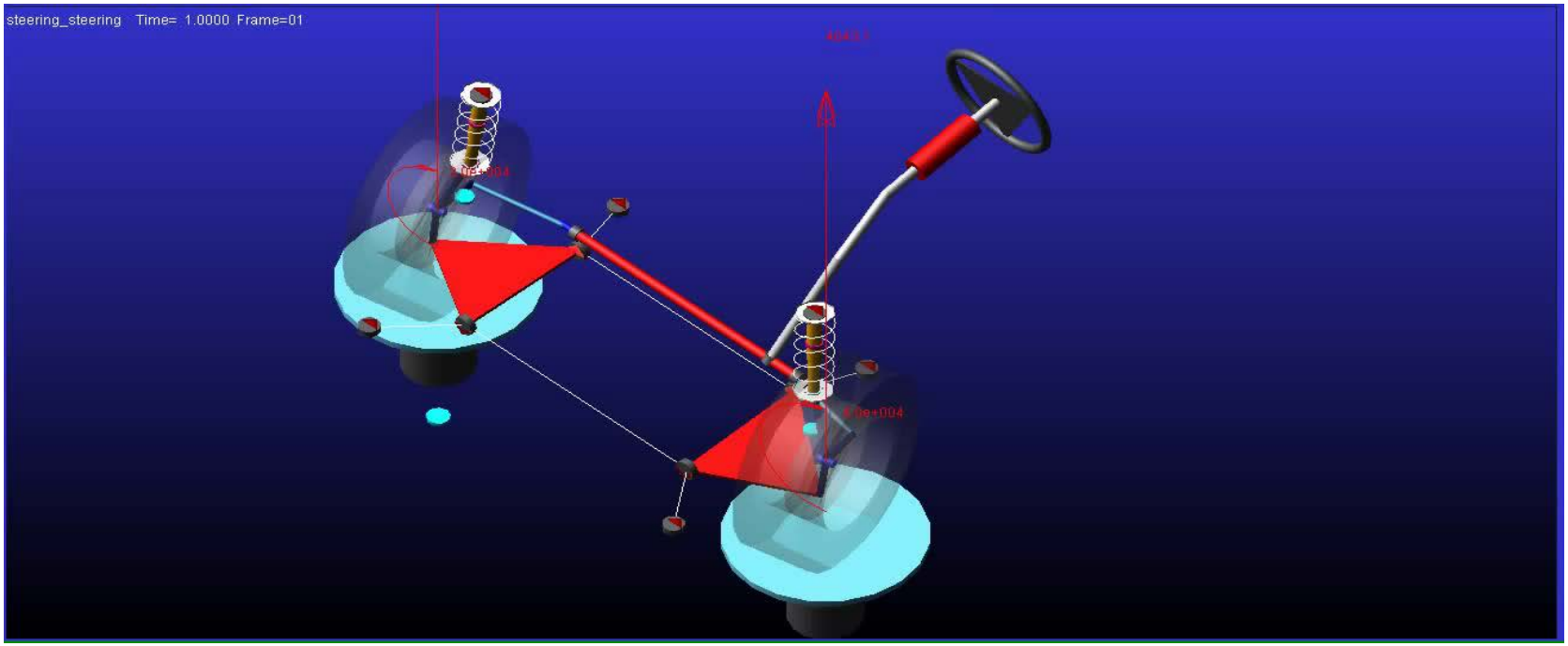

Adams/Car – suspension simulation

Dynamic simulation

STEP (x, x0, h0, x1, h1)
STEP(time,2,0,4,100)

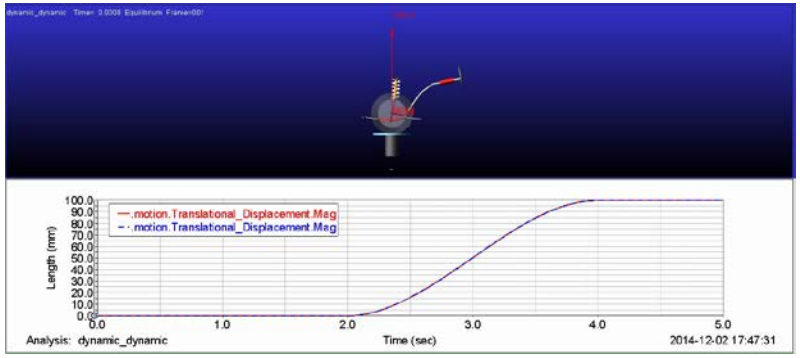

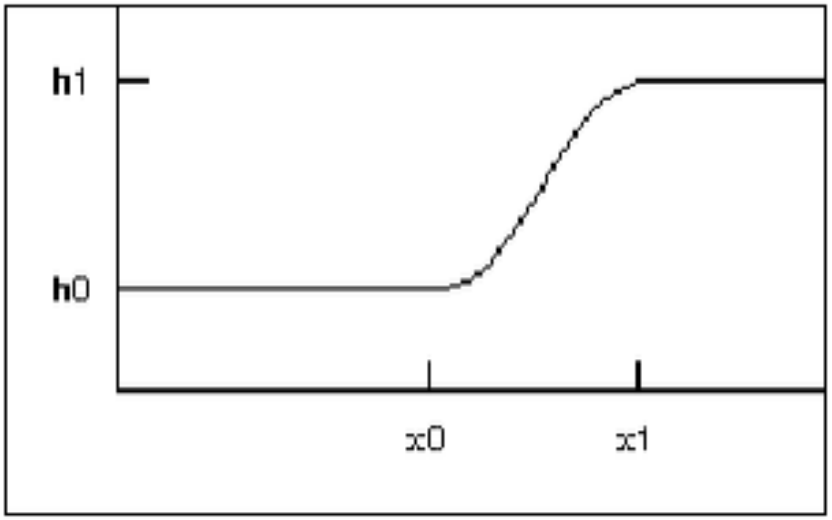

Adams/Car – suspension simulation

Static load

Wheel vertical force 0-2500N

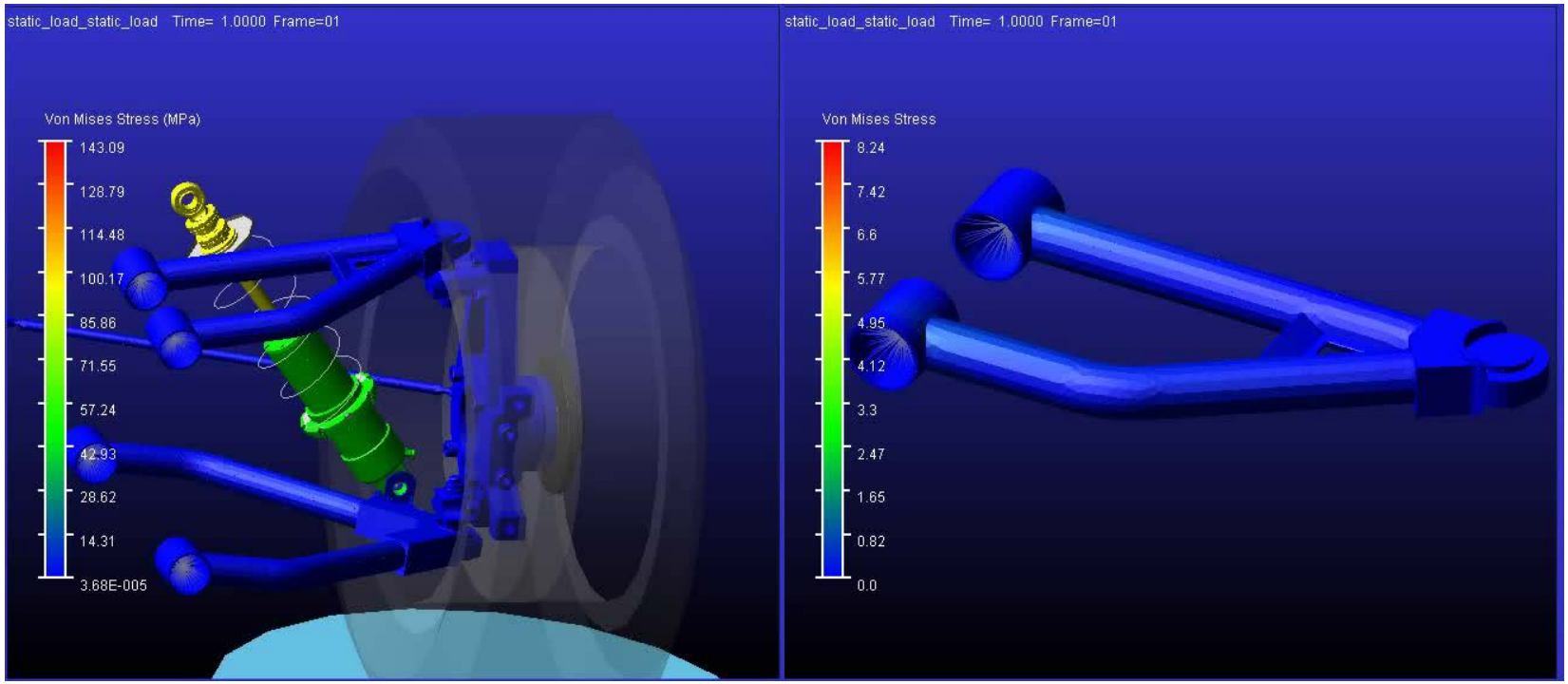

Adams/Car – suspension simulation

Outputs from simulations

- Data of parts of assembly
- Data of joints, springs, dampers, bushing
- Testrig data
- 25 suspension characteristic of non steerable suspension
- 11 suspension characteristic of steerable suspension

Help file

Adams/Car – full asembly simulation

- Data workflow during full assembly simulation

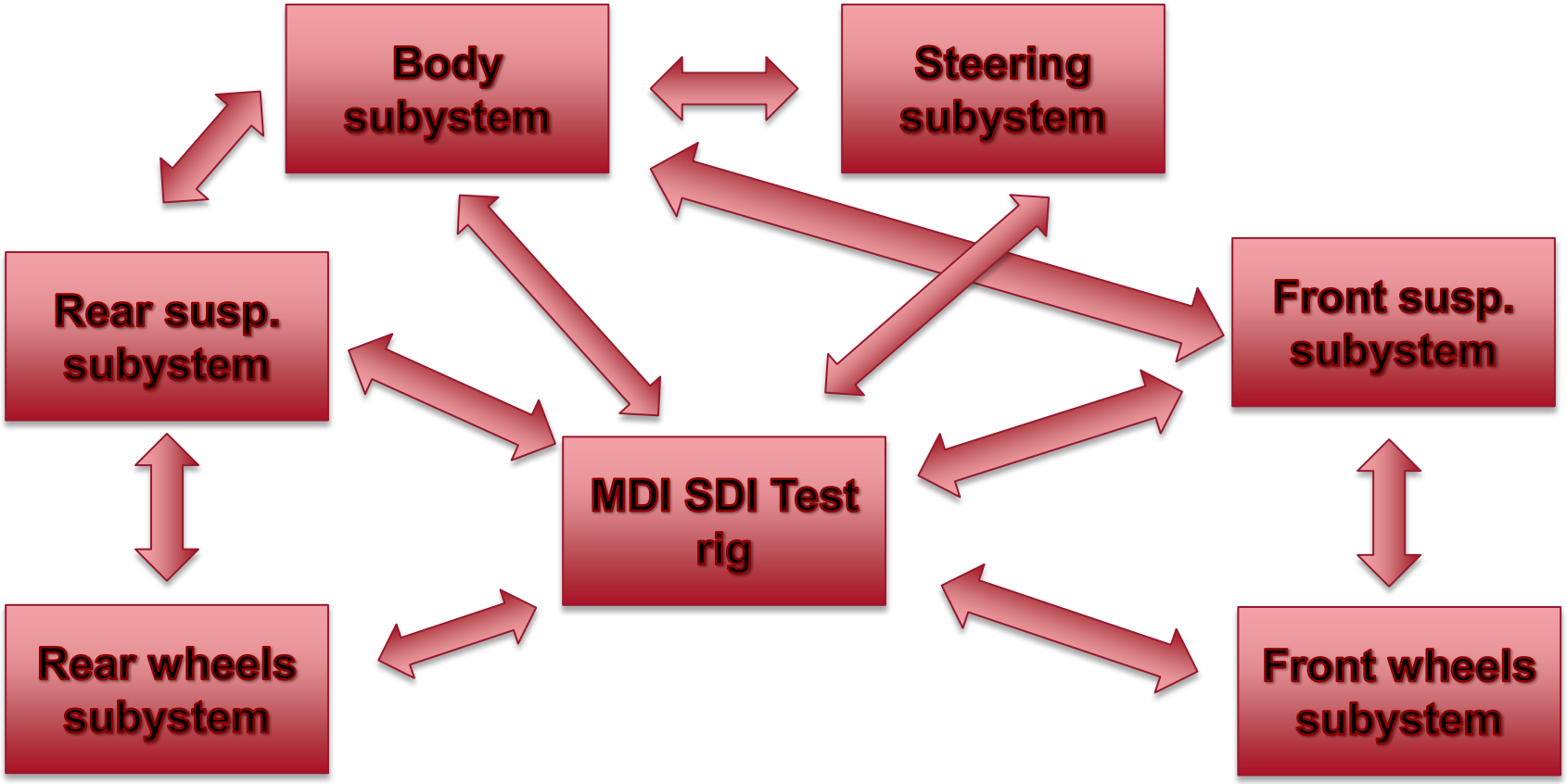

Adams/Car – full asembly simulation

- Vehicle maneuvers are carried out with Driving machine

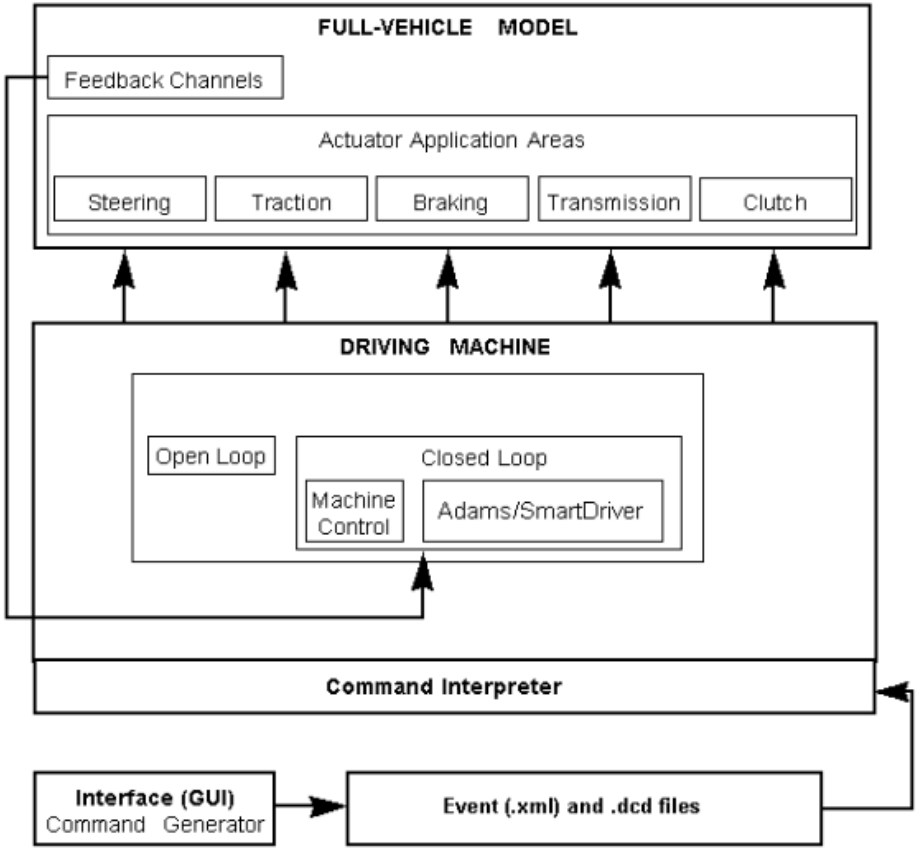

Adams/Car – full asembly simulation

Types of simulation

- Dynamic simulations
- Static and quasi static maneuvers
- Adams/Smart Driver

Dynamic simulations

- Open loop steering events
- Cornering events
- Course events
- Roll stability events

Generally file driven events

Adams/Car – full analysis simulation

Course events - ISO lane change

Vehicle speed 100 km/h

- ISO-3888: Double Lane Change

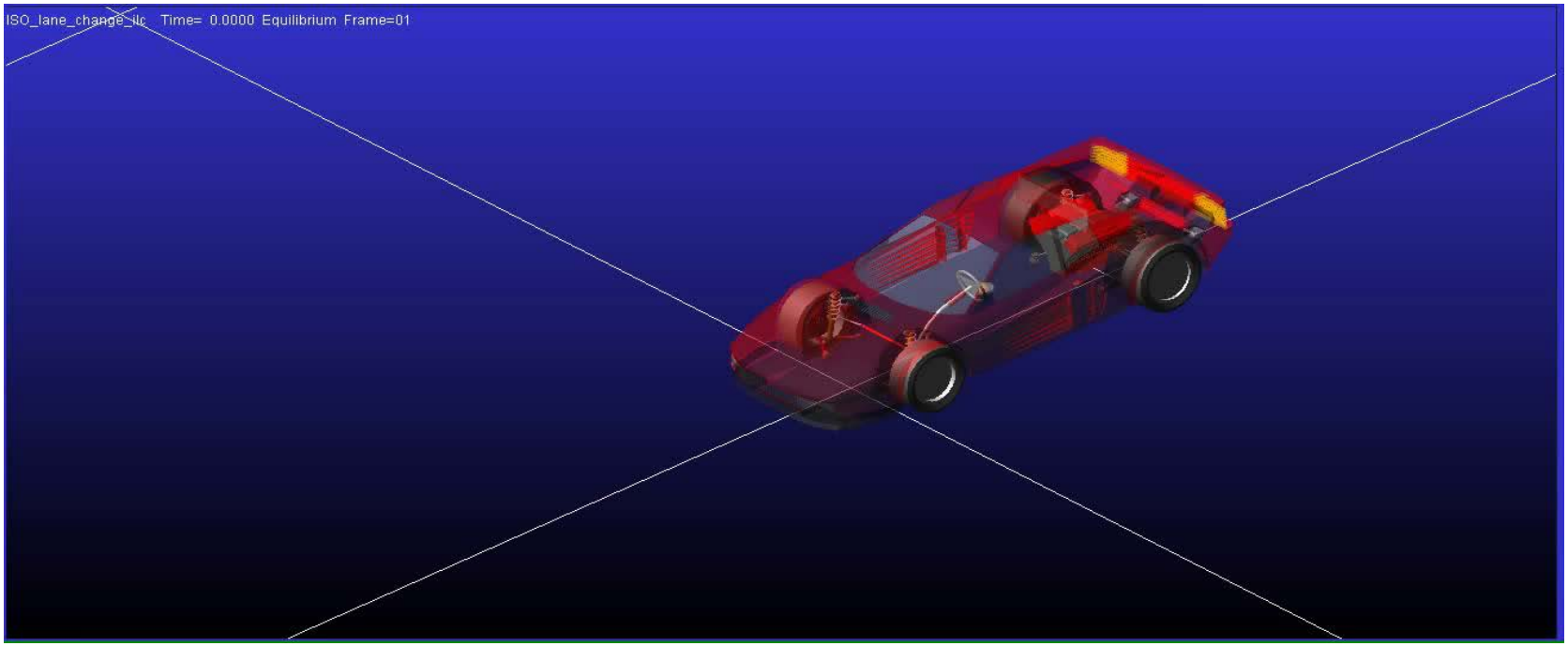

Adams/Car – full analysis simulation

Course events – 3D course

Vehicle speed 30 km/h

- 3D road with artifical obstacles

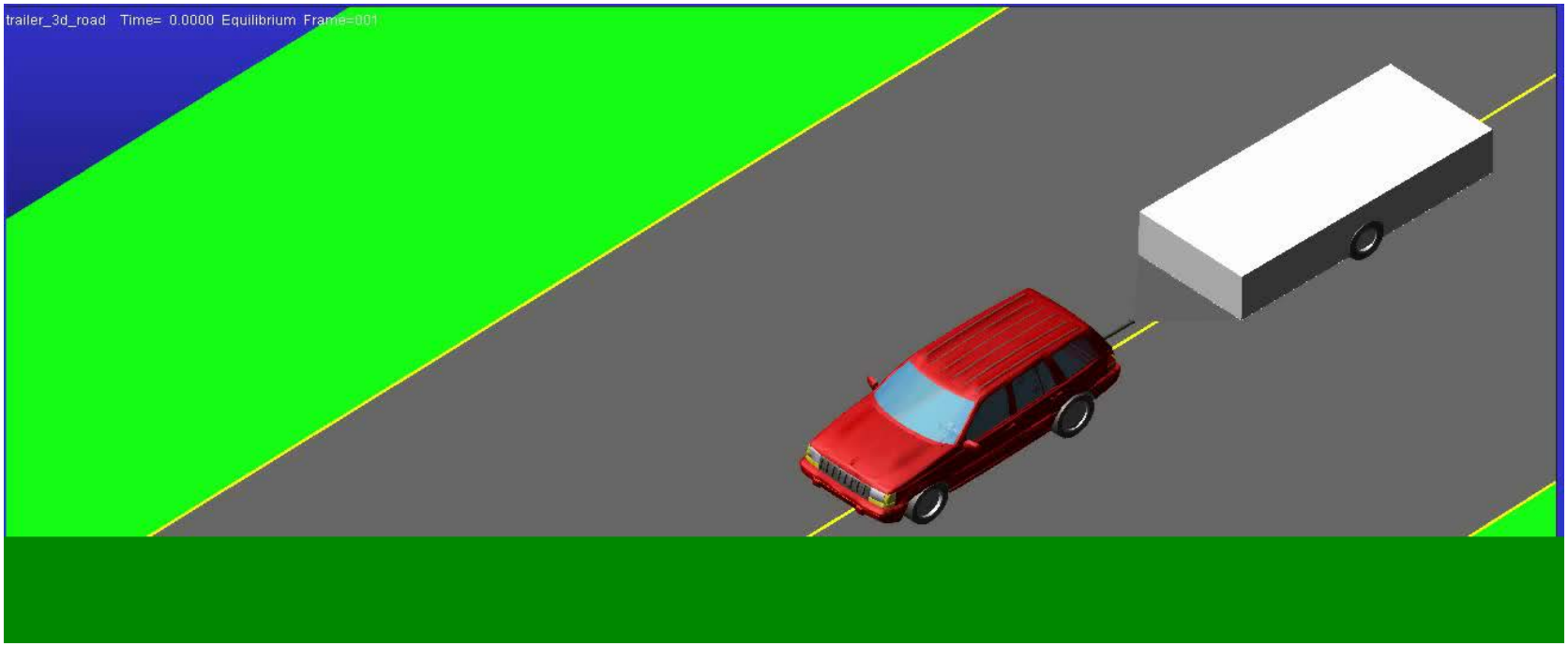

Adams/Car – full analysis simulation

Adams/Car Truck plugin

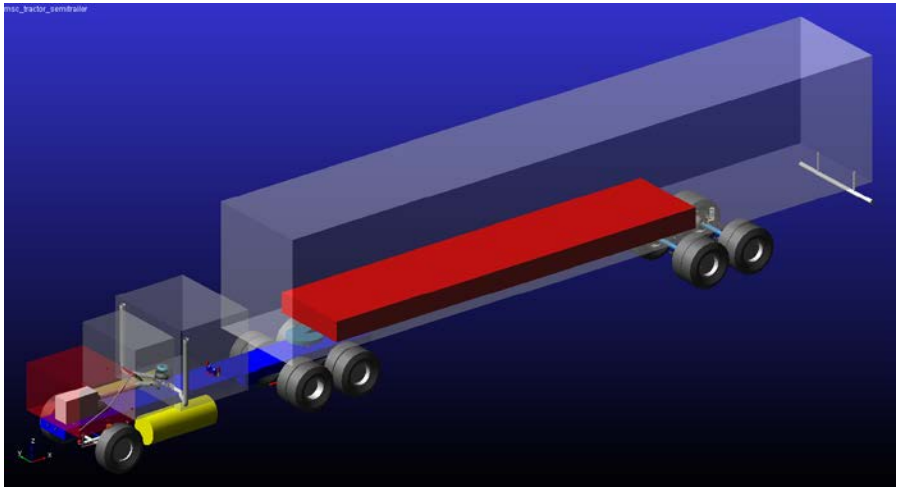

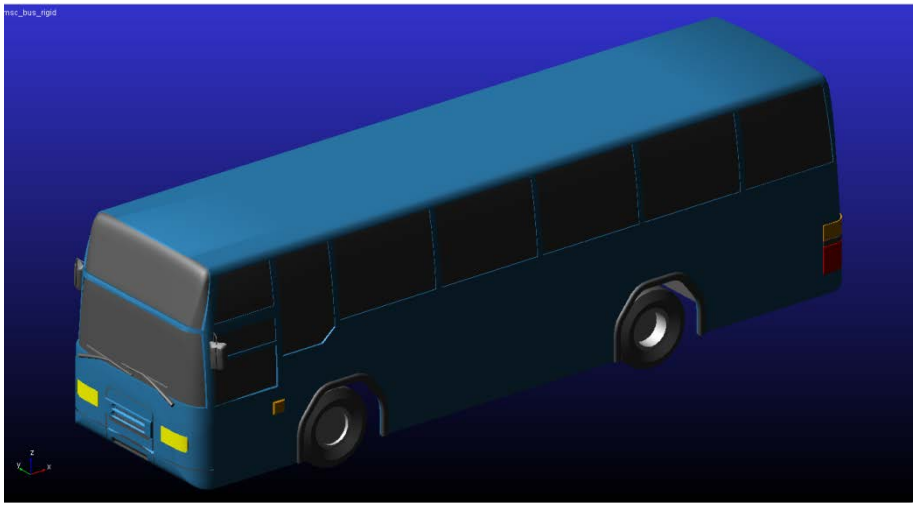

Adams/Car – full analysis simulation

Open loop steering event– single lane change

Vehicle speed 80 km/h

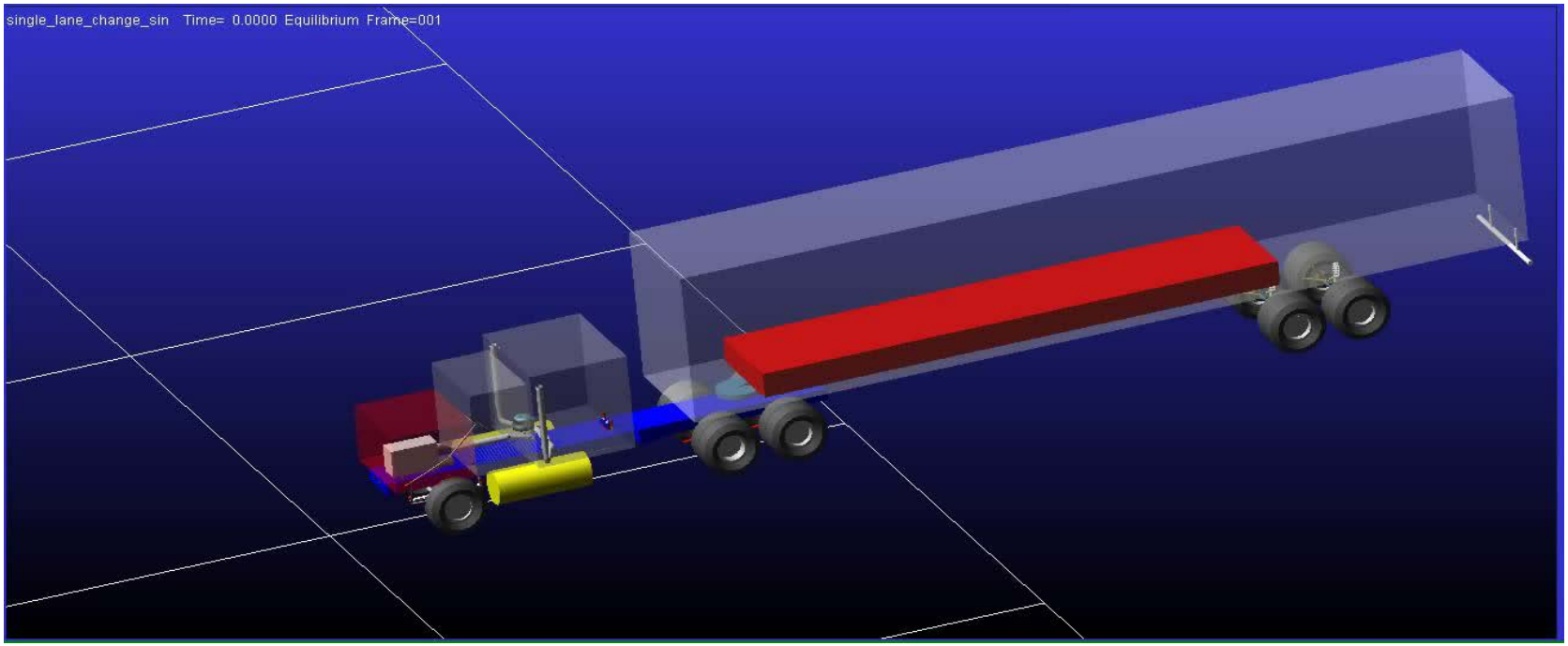

MSC Software licences and knowledgeware

- Students editions

http://www.mscsoftware.com/student-editions

- Students competitions

http://www.mscsoftware.com/page/formula-student

- Academic motion bundle

http://www.mscsoftware.com/teach-msc

- Academic learning center

http://www.mscsoftware.com/msc-academic-learning-center

- Adams Tutorial Kit for Mechanical Engineering Courses

http://www.mscsoftware.com/page/adams-tutorial-kit-mechanical-engineering-courses

Adams Tutorial Kit

Modules not maintaned by MSC

- Adams/Engine
- Adams/Aircraft
- Adams/Rail

Last versions in Adams 2008. Currently maintained by VI-Grade

http://www.vi-grade.com/

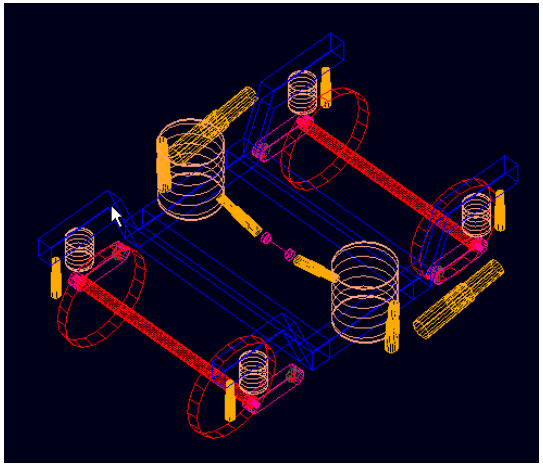

Modules not maintaned by MSC

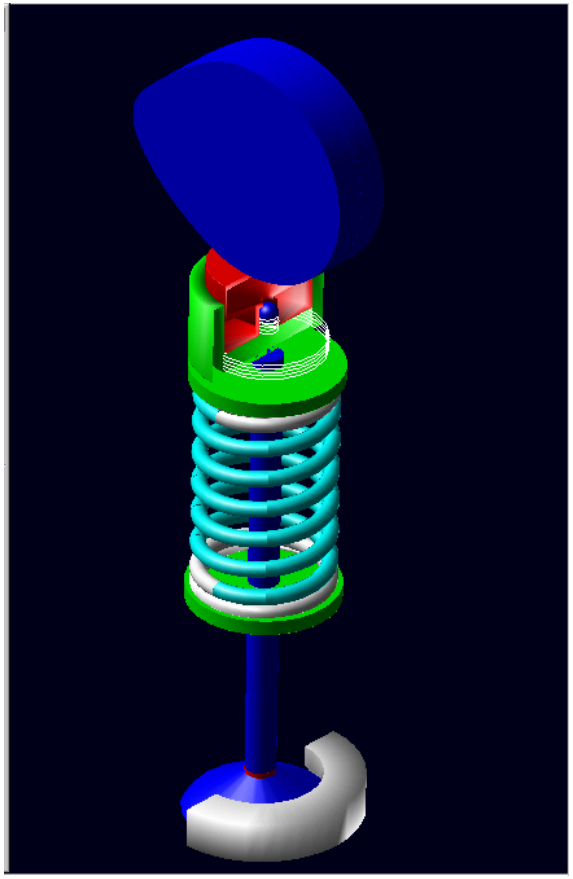

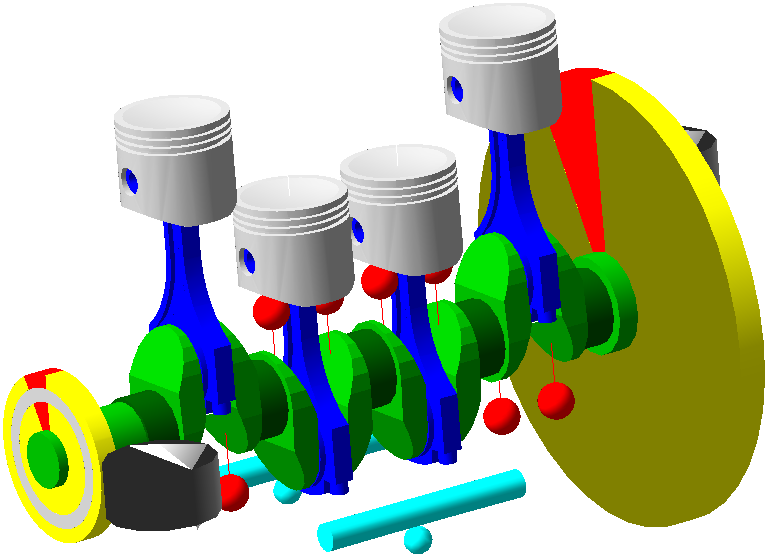

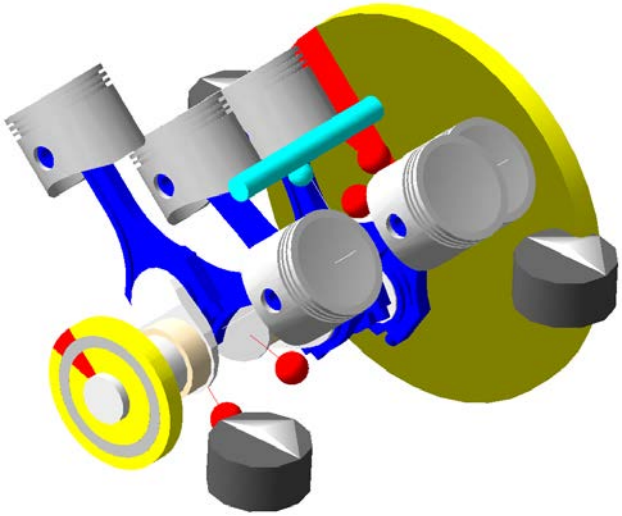

Usage MSC Adams on FME STU

- 150 licenses of Adams 2005
- 2 licenses of Adams 2014
- Unknown nmber of student licenses

http://atc.sjf.stuba.sk/

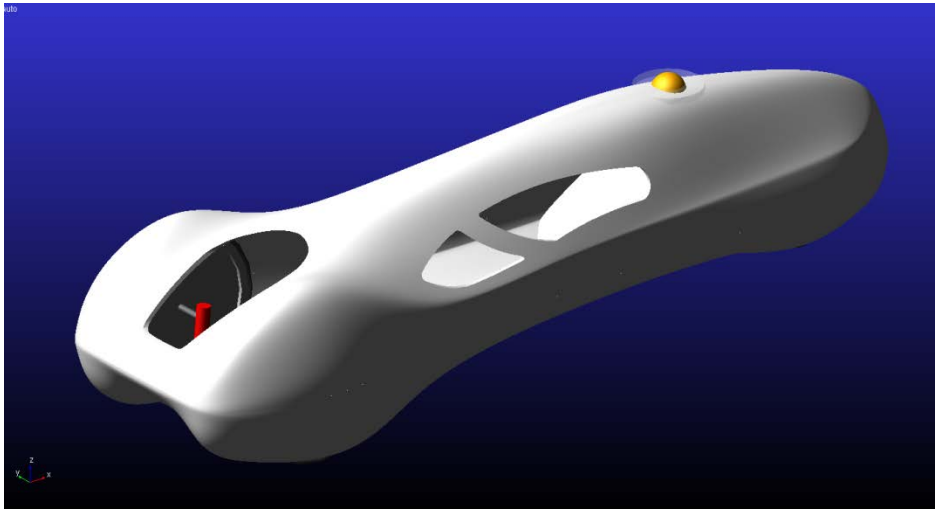

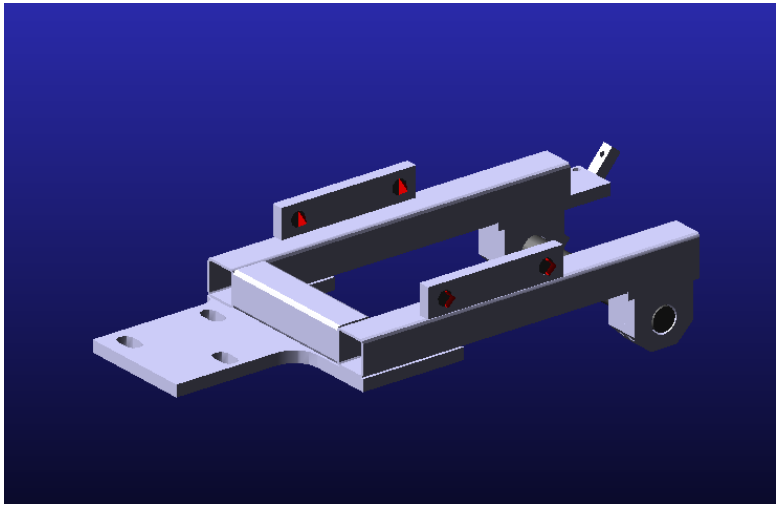

THANK YOU FOR YOUR ATTENTION!

jozef.bucha@stuba.sk